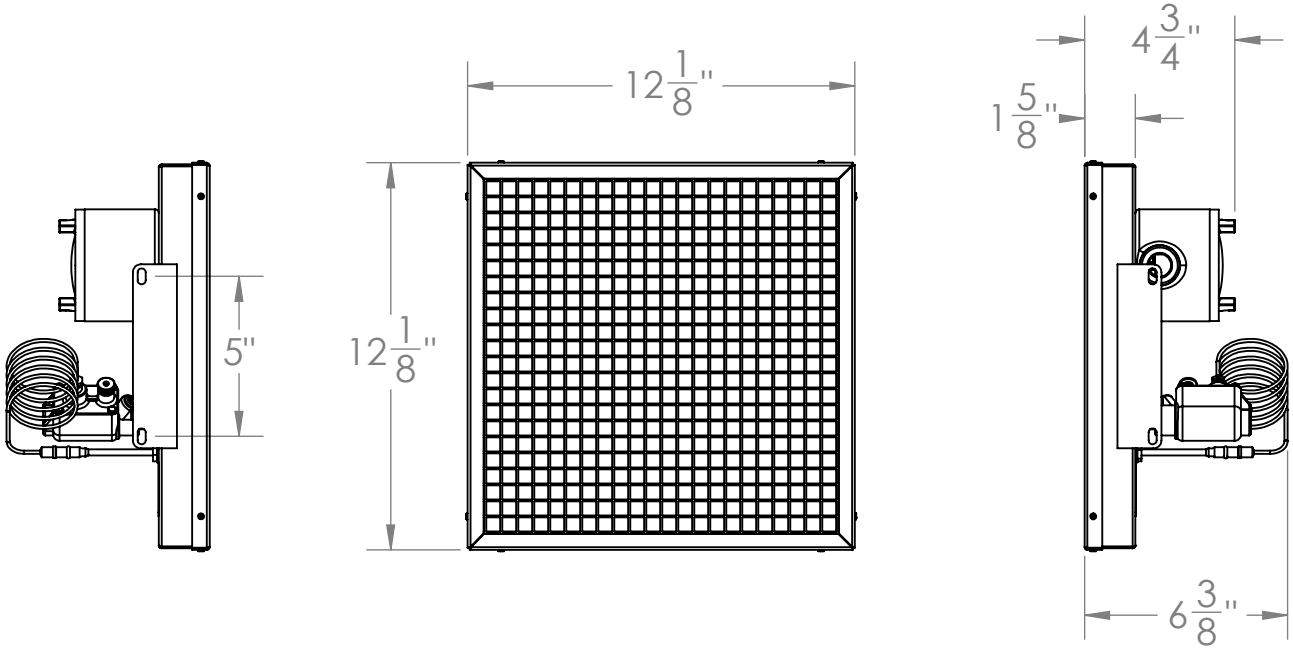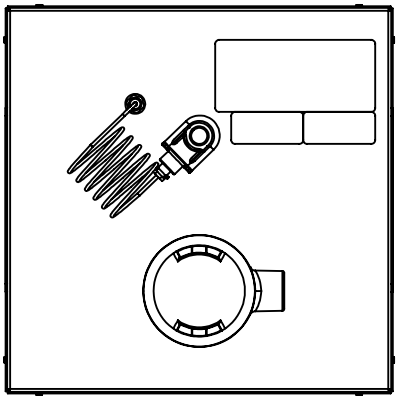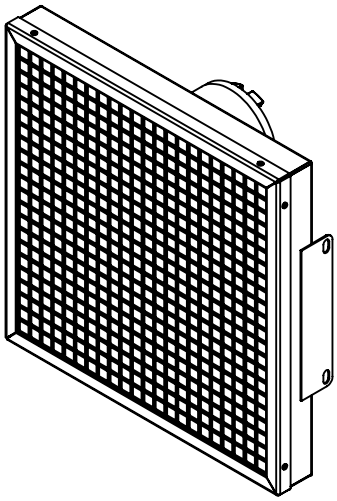
12 1/8"
4 3/4"
1 5/8"
5"
12 1/8"
6 3/8"