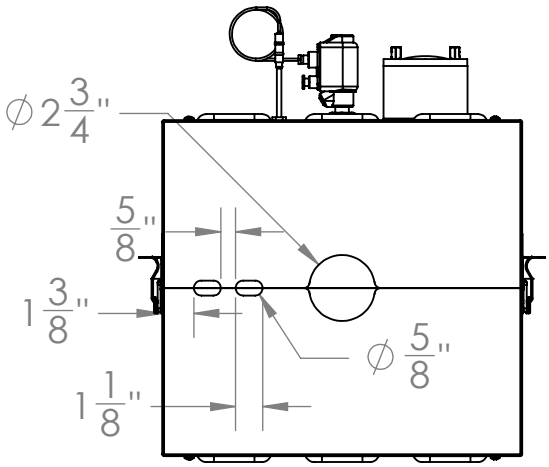
∅ 2 3/4"
5/8"
1 3/8"
1 1/8"
∅ 5/8"

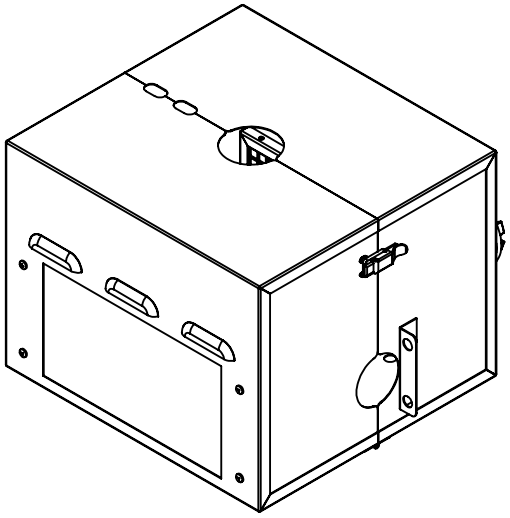

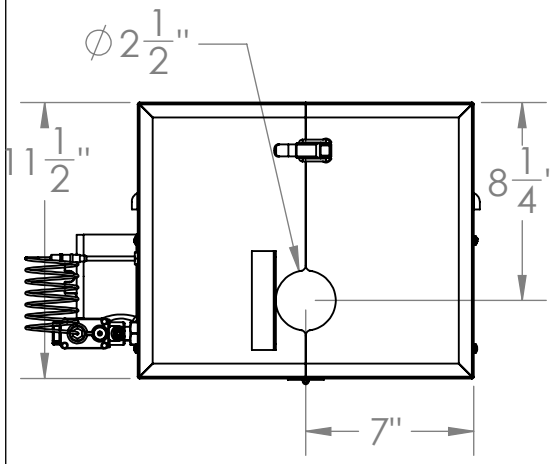
∅ 2 1/2"
11 1/2"
8 1/4"
7"

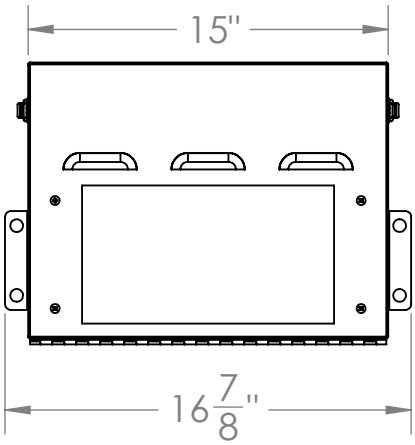
15"
16 7/8"

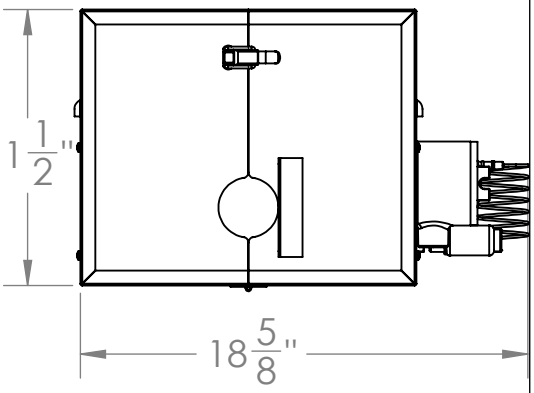
11 1/2"
18 5/8"

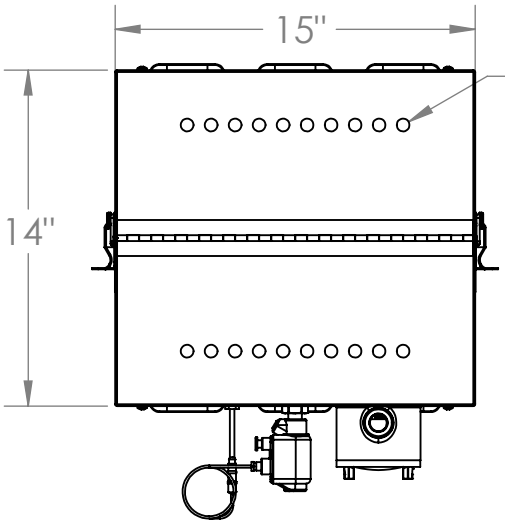
15"
∅ 1/2"
14"