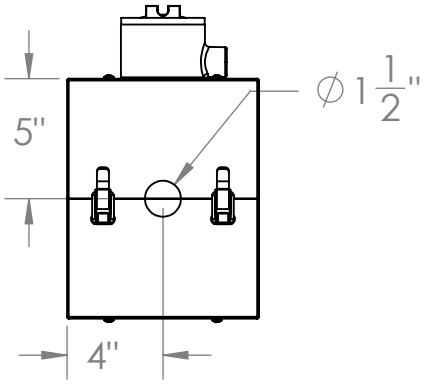
5"
∅ 1 1/2"
4"

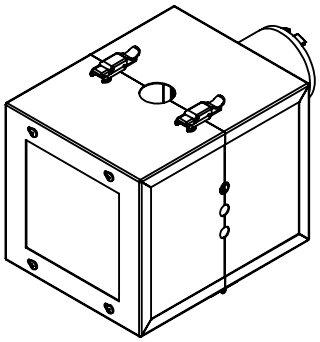

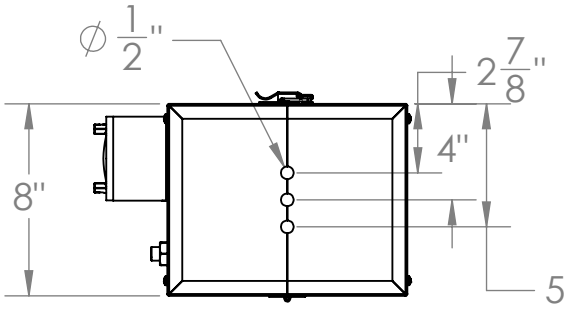
∅ 1/2"
2 7/8"
4"
8"
5 1/8"

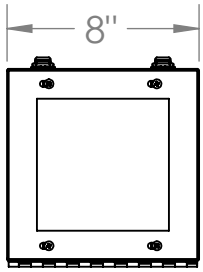
8"

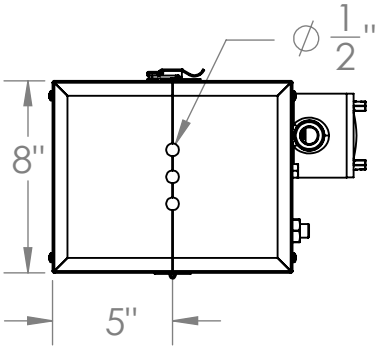
∅ 1/2"
8"
5"

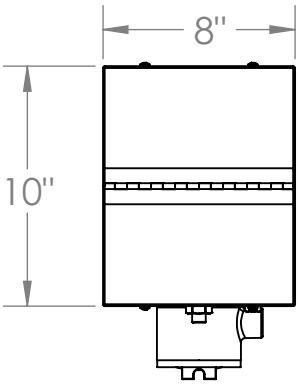
8"
10"