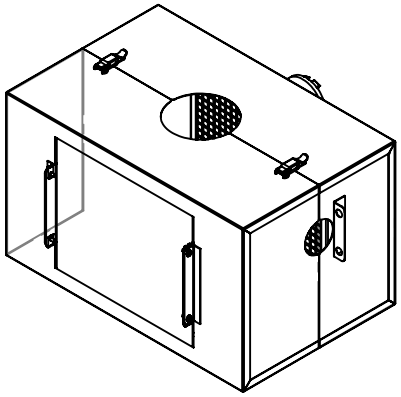

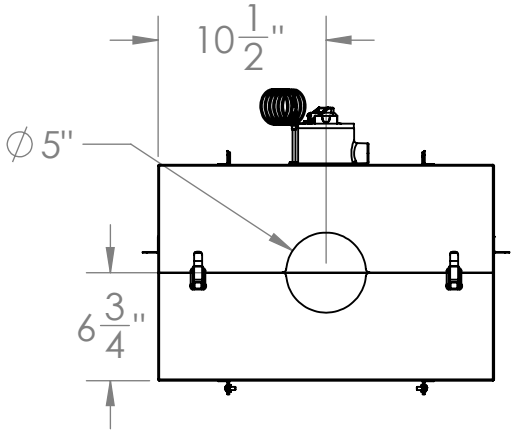
10 1/2"
∅ 5"
6 3/4"

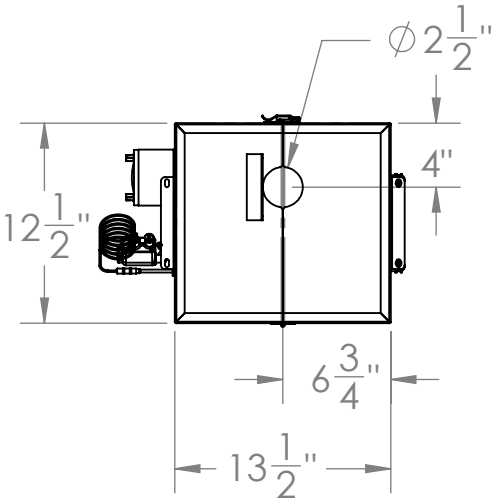
∅ 2 1/2"
4"
12 1/2"
6 3/4"
13 1/2"

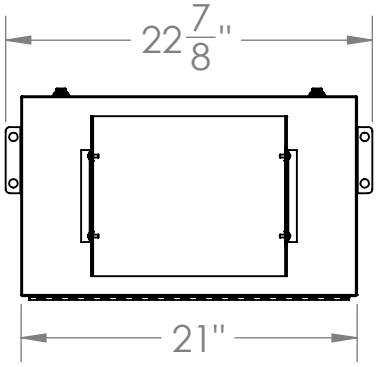
22 7/8"
21"

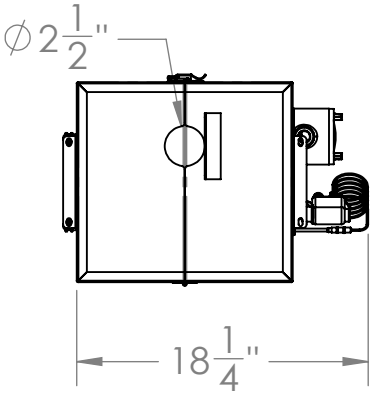
∅ 2 1/2"
18 1/4"

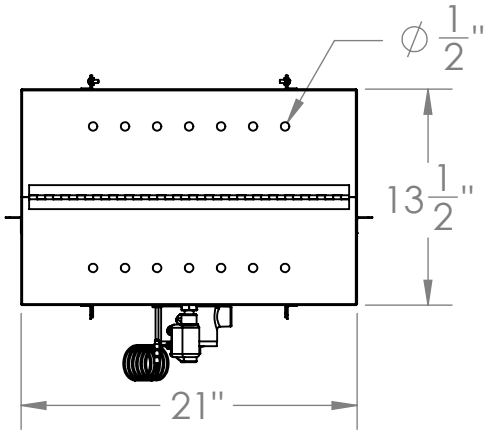
∅ 1/2"
13 1/2"
21"