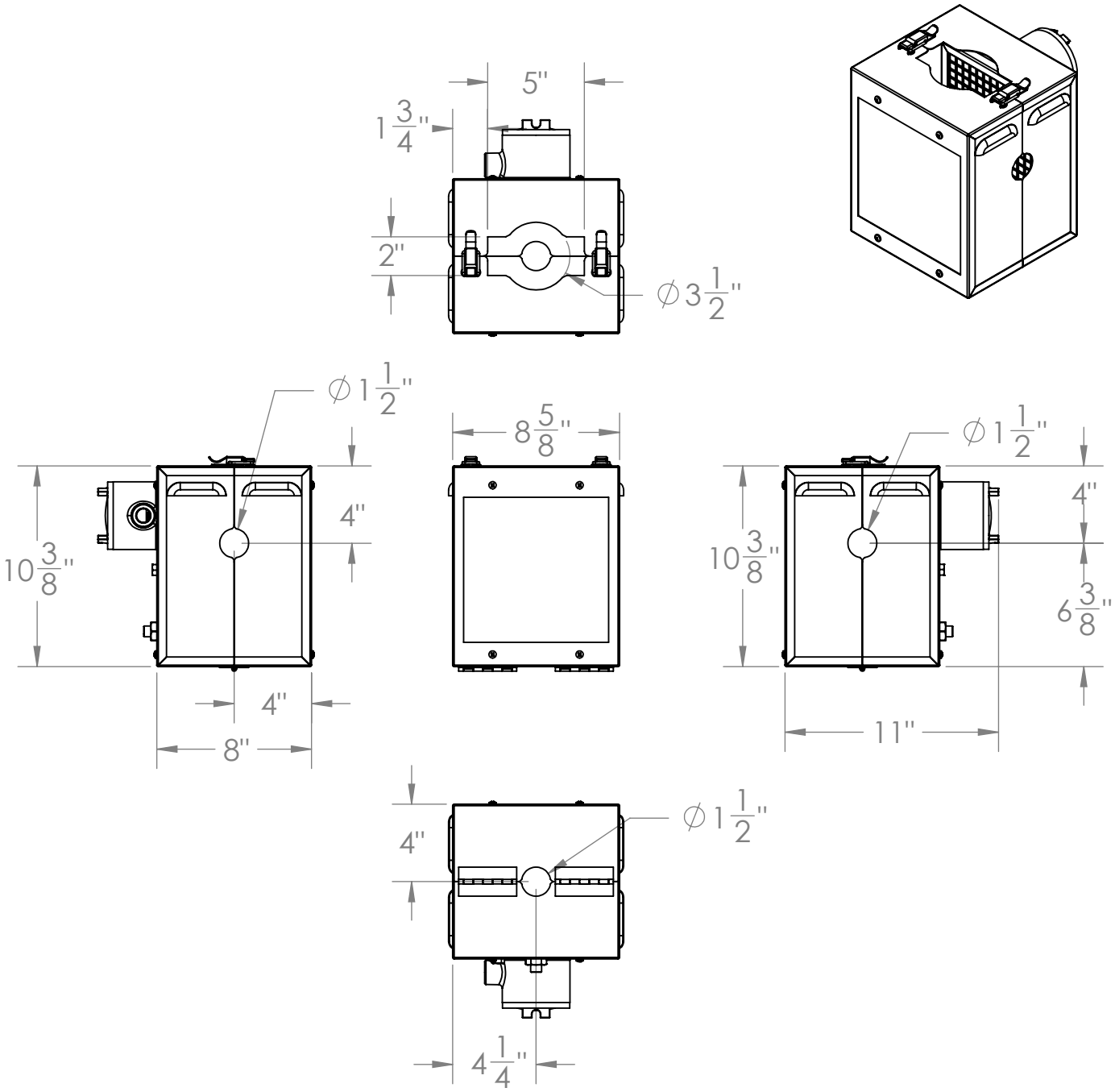
5"
1 3/4"
2"
∅3 1/2"
∅1 1/2"
8 5/8"
4"
10 3/8"
4"
8"
∅1 1/2"
4"
10 3/8"
6 3/8"
11"
∅1 1/2"
4"
4 1/4"